COEPOWER

COEPOWER STANDARD SERIES

STATIC VAR GENERATOR
ACTIVE HARMONIC FILTER

SVG / AHF

+86-17755260880

www.coepowers.com

sales@coepower.com

Building 4, Xi'an Te Fei Yuan Industrial Park, No. 2, Biyuan 3rd Road,
High-tech Zone, Xi'an City, 710065, China

AHF Active Harmonic Filter

INTRODUCTION

AHF is an active harmonic filter based on power electronics technology. It detects harmonic currents generated by the load in real time, generates a compensating current with the same amplitude but opposite to the harmonic current, and injects it into the power grid. This eliminates load harmonics, restoring the grid-side current to a sinusoidal wave, thereby improving power quality.

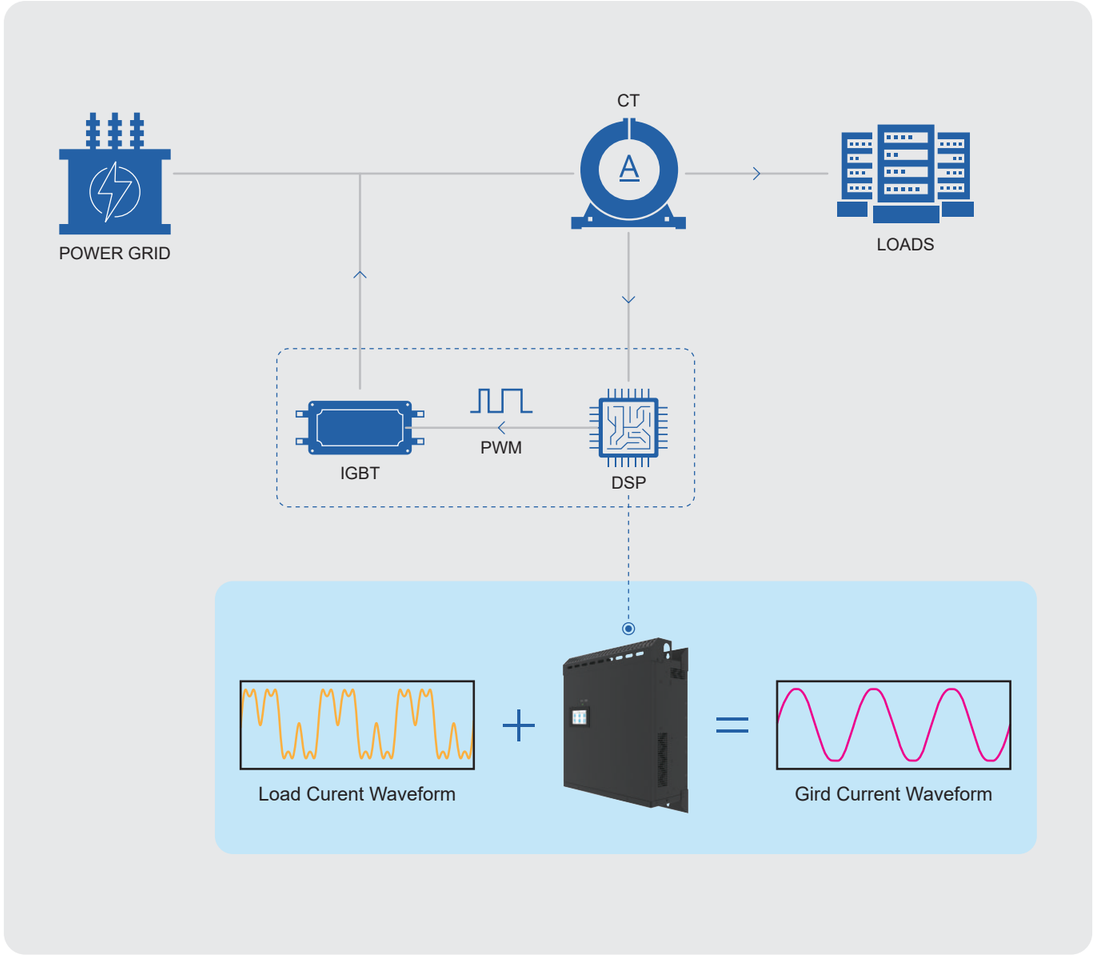

THREE-LEVEL TOPOLOGY DIAGRAM

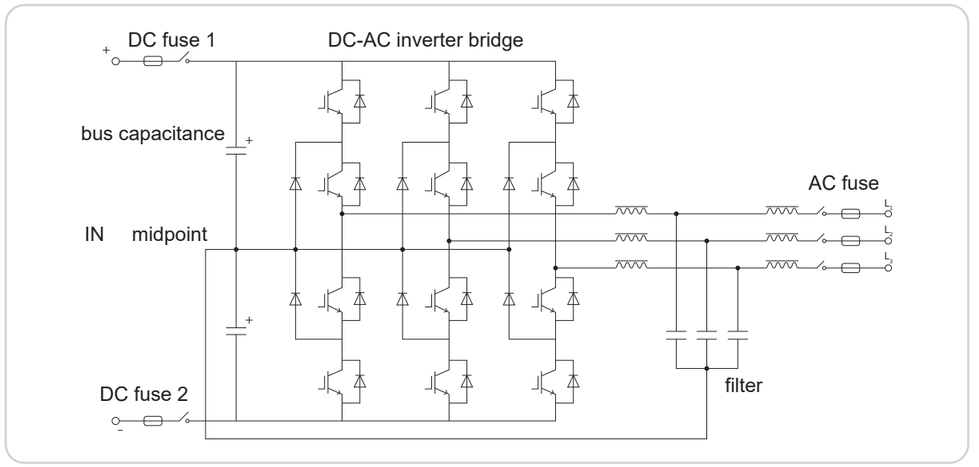

The three-level topology delivers a highly sinusoidal output waveform,meeting the stringent IEEE-519 standard for power quality with exceptional harmonic suppression. Achieves a system efficiency exceeding 97%. Its low dv/dt characteristic minimizes EMI interference, enhancing operational stability and reliability.

FEATURE

- Harmonic filter,reactive power compensation, three -phase imbalance correction.
- Tatal response time is less than 10ms
- 16 comprehensive protection functions
- Selectable harmonic filtering from 2nd to 50th harmonics.
- Lightweight and portable, easy to install.

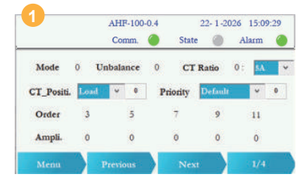

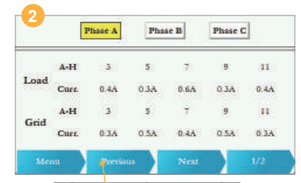

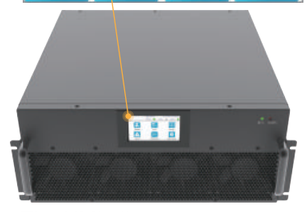

The HMI allows users to set compensation for different harmonic orders and reactive power compensation rates.

SVG Static Var Generator

INTRODUCTION

SVG detects the voltage and current in the power system, calculates the reactive current component that needs to be compensated, and then outputs a reactive current with the same frequency as the power grid and a phase leading or lagging by 90°, thereby achieving real-time compensation of the reactive power of the power grid.

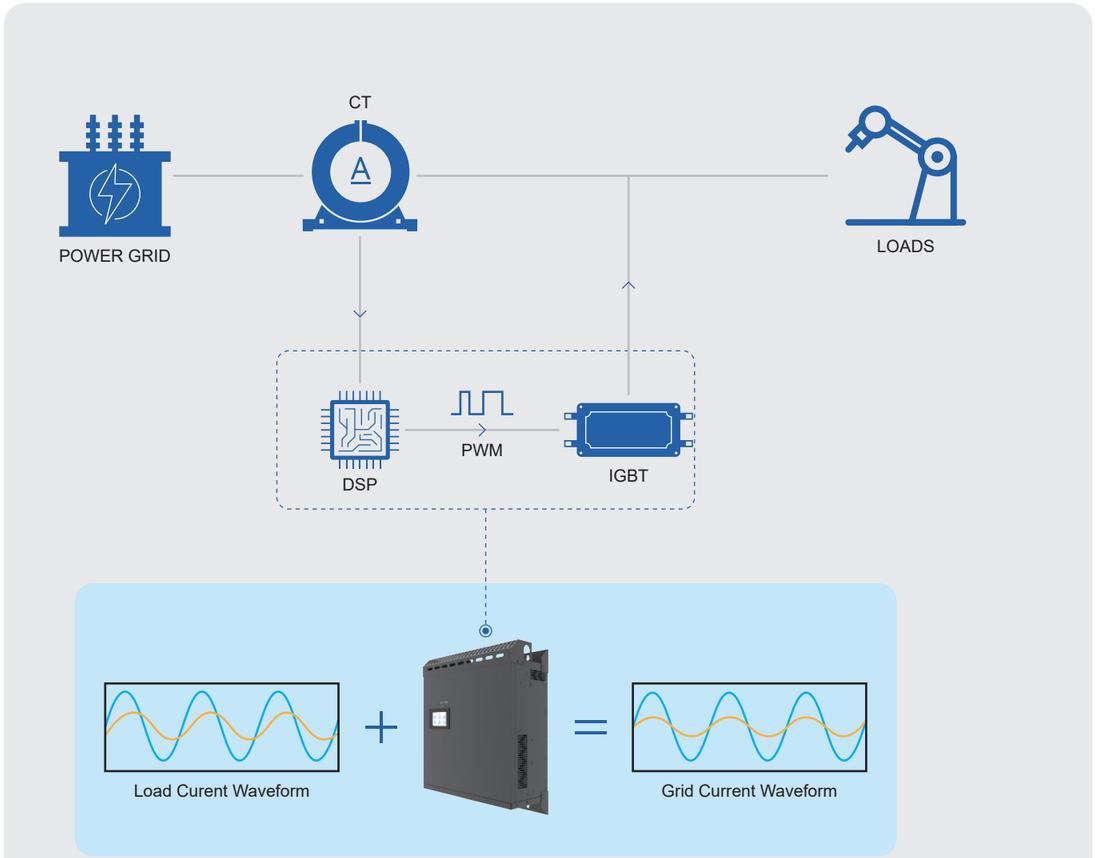

FEATURE

- PF compensation range(-1 to 1);
- Fast response speed, full compensation response speed ≤10ms;
- Capable of compansating 3rd to 13th harmonics
- Three -phase imbalance correction
- Parallel connection to power system,16 comprehensive protection functions
- User-friendly operating system design,simple and easy to understand.

Module HMI

SVG's HMI has four-quadrant power factor compensation functionality, allowing users to set target power factor values and related reactive power compensation settings for different quadrants.



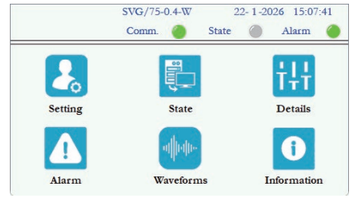

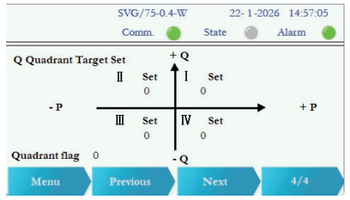



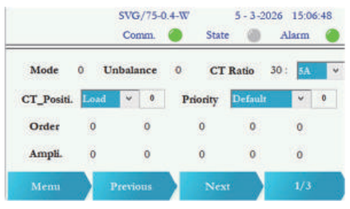

Static Var Generator -0.22kV/0.4kV					
Rated Capacity at 0.22kV	15kvar	25kvar	35kvar	55kkvar	75kvar
Rated Capacity at 0.4kV	30kvar	50kvar	75kvar	100kvar	150kvar
Active Harmonic Filter -0.22kV/0.4kV					
Rated Capacity at 0.22kV	50A	75A	100A	150A	200A
Rated Capacity at 0.4kV	50A	75A	100A	150A	200A
Technical Specifications					
Module Size (Rack)(W*D*H)(mm)	460*483*86	540*545*190	540*545*190	540*551*219	540*595*219
Module Size (Wall)(W*D*H)(mm)	424*89*541	504*193*591	504*193*591	503*222*609	503*222*653
Net Weight	16kg	32kg	34kg	42kg	44kg
Air Flow for Heat Dissipation	4x80CFM	3x120CFM	4x120CFM	4x190CFM	4x190CFM
Rated Voltage	220V(176V-264V)/ 400V(304V-456V)				
Frequency	50Hz/ 60Hz(Range: 45Hz- 62.5Hz)				
Wiring Structure	1P2W/ 2P3W/ 3P3W/ 3P4W				
Harmonic Filtering	2nd-13th(SVG); 2nd-50th(AHF)				
Reactive Power Compensation	Adjustable from -1 to +1				
Unbalance Correction	100% imbalance correction				
Protection Function	Over-voltage protection, under-voltage protection, short-circuit protection, inverter bridge inverse protection, over-compensation protection and so on				
Current Transformer	50/5-8000/5				
Compensation Rate	≥97%				
Filter Performance	THDi<5%				
Noise Level	<65dB				
Response Time	50us				
Full Response Time	<10ms				
IGBT Switching Frequency	20kHz				
Topology Design	3 level topology				
Parallel Quantities	Unlimited				
Communication Port	RS485 Communication & Optional Ethernet				
Communication Protocol	Modbus Protocol & TCP/IP Protocol				
Module Display Interface	4.3" Display/7" /10" extra Display				
Mounting Type	Wall mounted/ Rack mounted/ Cabinet				
Monitoring	Independent monitoring and centralized monitoring				
Standard Compliance	EN IEC 61000; EN IEC 62477; UL 508:2024 and CSA C22.2				
Protection Class	IP 20(Can be customized)				
Operating Temperature	-10-45℃				
Relative Humidity	5% to 95% non-condensing				
Altitude	Up 2000 m. Between 2000 m to 4000 m, according to GB/T3859.2, the power decreases by 1% for every additional 100 m.				
Color	Black or Customized Color				

Static Var Generator - 0.48kV					
Rated Capacity	12/ 20/ 30kvar	40kvar	60kvar	80/100kvar	120kvar
Active Harmonic Filter - 0.48kV					
Rated Capacity	15A/ 25A/ 35A	50A	75A	100A/120A	150A
Technical Specifications					
Module Size (Rack)(W*D*H)(mm)	460*483*86	540*545*190	540*545*190	540*551*219	540*551*219
Module Size (Wall)(W*D*H)(mm)	424*89*541	504*193*584	504*191*584	503*222*609	503*222*609
Net Weight	16kg	32kg	34kg	42kg	42kg
Air Flow for Heat Dissipation	4x80CFM	3x120CFM	4x120CFM	4x190CFM	4x190CFM
Wiring Structure	3P3W	3P3W	3P3W/3P4W	3P3W/3P4W	3P3W
Frequency	50Hz / 60Hz (Range: 45Hz-62.5Hz)				
Rated Voltage	480V(384V-528V)				
Harmonic Filtering	2nd-13th(SVG); 2nd-50th(AHF)				
Reactive Power Compensation	Adjustable from -1 to +1				
Unbalance Correction	100% imbalance correction				
Protection Function	Over-voltage protection, under-voltage protection, short-circuit protection, inverter bridge inverse protection, over-compensation protection and so on				
Current Transformer	50/5-8000/5				
Compensation Rate	≥ 97%				
Filter Performance	THDi<5%				
Noise Level	<65dB				
Response Time	50us				
Full Response Time	<10ms				
IGBT Switching Frequency	20kHz				
Topology Design	3 level topology				
Parallel Quantities	Unlimited				
Communication Port	RS485 Communication & Optional Ethernet				
Communication Protocol	Modbus Protocol & TCP/IP Protocol				
Module Display Interface	4.3" Display/7" /10" extra Display				
Mounting Type	Wall mounted/ Rack mounted/ Cabinet				
Monitoring	Independent monitoring and centralized monitoring				
Standard Compliance	EN IEC 61000; EN IEC 62477; UL 508:2024 and CSA C22.2				
Protection Class	IP 20(Can be customized)				
Operating Temperature	-10-45℃				
Relative Humidity	5% to 95% non-condensing				
Altitude	Up 2000 m. Between 2000 m to 4000 m, according to GB/T3859.2, the power decreases by 1% for every additional 100 m.				
Color	Black or Customized Color				

Static Var Generater - 0.69kV/0.8kV		
Rated Voltage	690V(483V-759V)	800V(560V-880V)
Rated Capacity	120kvar	138kvar
Active Harmonic Filter - 0.69kV/0.8kV		
Rated Voltage	690V(483V-759V)	800V(560V-880V)
Rated Capacity	100A	80A
Wiring Structure	3P4W/ 3P3W	3P3W

Technical Specifications	
Module Size (Rack)(W*D*H)(mm)	540*743*250
Module Size (Wall)(W*D*H)(mm)	504*253*786
Net Weight	64kg
Air Flow for Heat Dissipation	4x190CFM
Frequency	50Hz/ 60Hz (Range: 45Hz - 62.5Hz)
Harmonic Filtering	2nd-13th(SVG); 2nd-50th(AHF)
Reactive Power Compensation	Adjustable from -1 to +1
Unbalance Correction	100% imbalance correction
Protection Function	Over-voltage protection, under-voltage protection, short-circuit protection, inverter bridge inverse protection, over-compensation protection and so on
Current Transformer	50/5-8000/5
Compensation Rate	≥ 97%
Filter Performance	THDi<5%
Noise Level	<65dB
Response Time	50us
Full Response Time	<10ms
IGBT Switching Frequency	20kHz
Topology Design	3 level topology
Parallel Quantities	Unlimited
Communication Port	RS485 Communication & Optional Ethernet
Communication Protocol	Modbus Protocol & TCP/IP Protocol
Module Display Interface	4.3" Display/7" /10" extra Display
Mounting Type	Wall mounted/ Rack mounted/ Cabinet
Monitoring	Independent monitoring and centralized monitoring
Standard Compliance	EN IEC 61000; EN IEC 62477; UL 508:2024 and CSA C22.2
Protection Class	IP 20(Can be customized)
Operating Temperature	-10-45℃
Relative Humidity	5% to 95% non-condensing
Altitude	Up 2000 m. Between 2000 m to 4000 m, according to GB/T3859.2, the power decreases by 1% for every additional 100 m.
Color	Black or Customized Color

PROJECT CASE

Commercial Buildings, Offices & Hotels

Install SVG to optimize power quality in hotels, office buildings and shopping malls. This advanced reactive power compensation device ensures uninterrupted operation of elevators, hvac systems and lighting systems.









Cranes & Welding Machines

SVG optimizes power quality for cranes, welding machines and heavy industrial equipment. Featuring fast response and dynamic load compensation, it effectively improves power factor and energy efficiency in industrial sites.




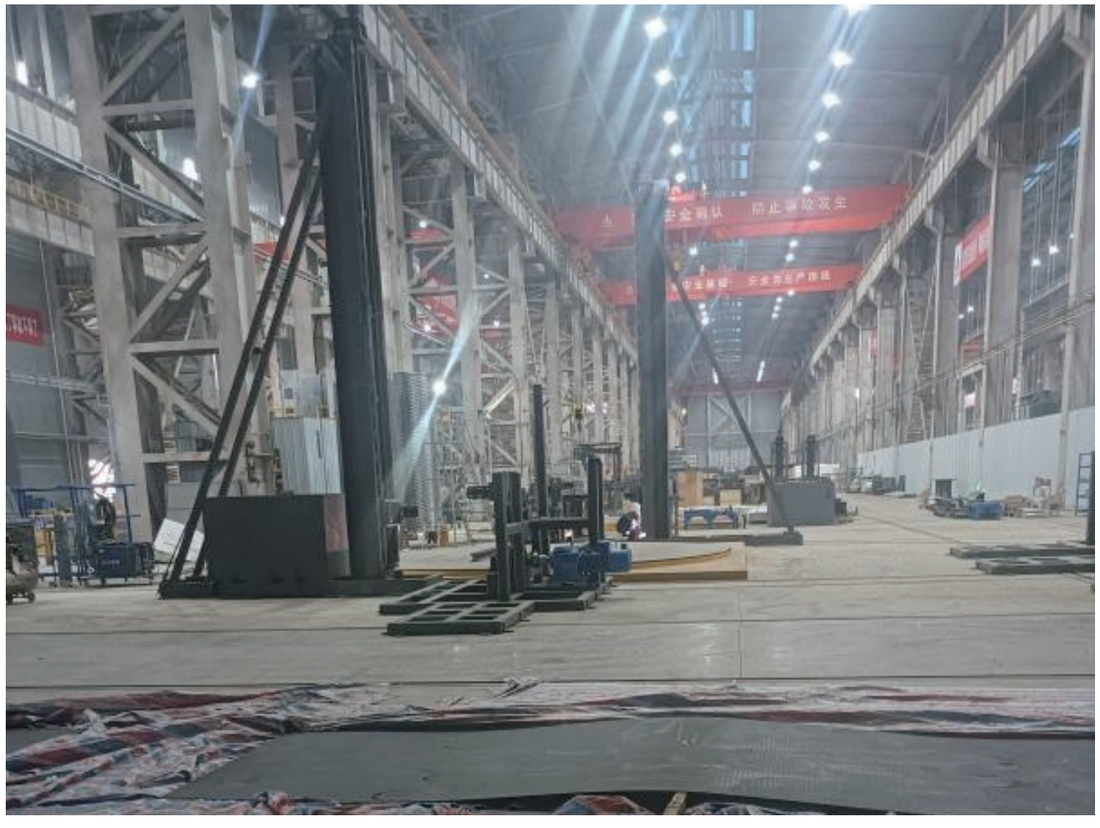

Variable Frequency Drives, Servos & Motors

AHF Filter harmonics and provides static reactive compensation for variable frequency drives, servos and motors. It improves power factor and optimizes power quality in industrial applications.







Wind And Solar Power Generation Sites

SVG and AHF improve power factor, mitigate harmonics, and enhance grid stability for solar pv and wind power generation sites. They ensure efficient, reliable grid connection and operation of renewable energy systems.






EV Charging Stations

EV charging stations generate high harmonics, large load fluctuations and three-phase imbalance. SVG and AHF effectively improve power quality, enhance power factor and ensure stable grid operation.



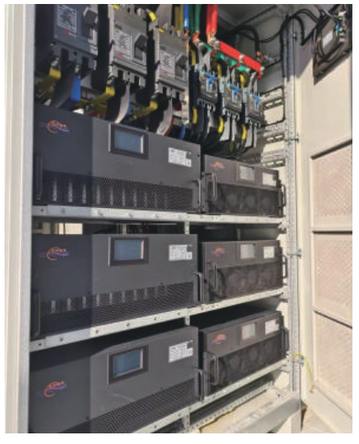


COEPOWER

MINI TYPE SVG/AHF

ALL IN ONE SOLUTION

+86-17755260880

www.coepowers.com

sales@coepower.com

Building 4, Xi'an Te Fei Yuan Industrial Park, No. 2, Biyuan 3rd Road,
High-tech Zone, Xi'an City, 710065, China

CO POWER

Mini SVG/AHF (In Parallel)

TINY DIMENSION

FLEXIBLE INSTALLATION

INCLUDES 3* 75A/20mA CT



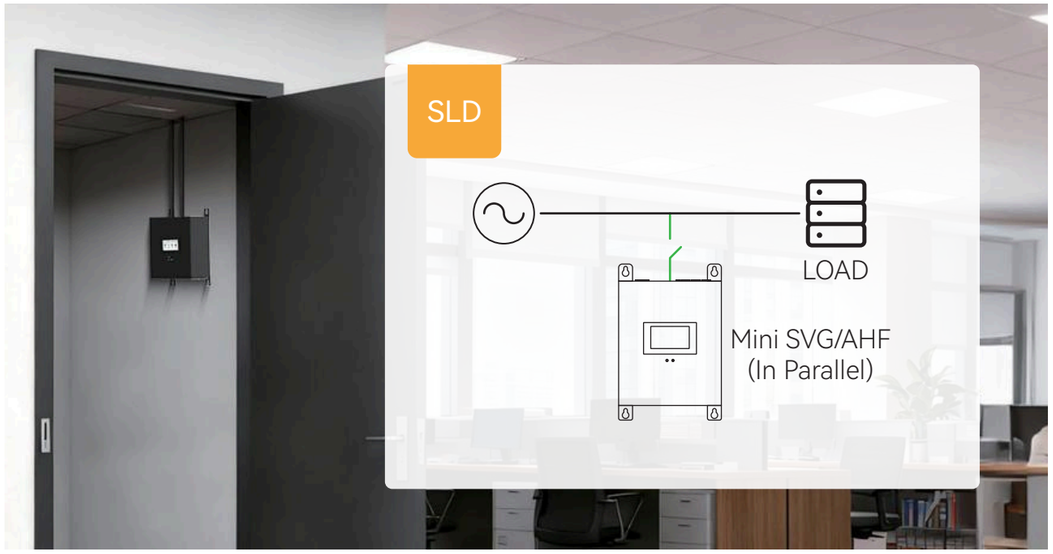

MINI TYPE SVG/AHF

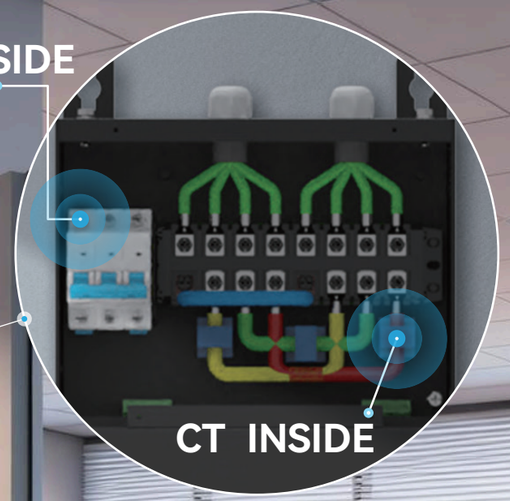

Mini SVG/AHF(In Series)

CT INSIDE(3*50A/20mA)

BREAKER INSIDE

EASY WIRING

SLD

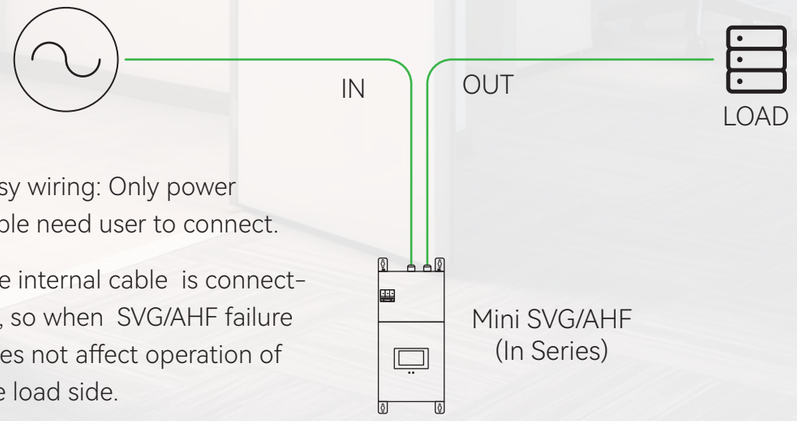

- Easy wiring: Only power cable need user to connect.
- The internal cable is connected, so when SVG/AHF failure does not affect operation of the load side.

Technical Specifications	AHF	SVG
Rated Capacity at 0.22kV	10 A	3 kvar
Rated Capacity at 0.4kV	10 A	5 kvar
Moudle Size (In Parallel)	260W*415H*165D	
Moudle Size (In Series)	260W*616H*160D	
Net Weight	8.5 kg	
Air Flow for Heat Dissipation	3x37CFM	
Rated Voltage	400V(304V~456V); 220V(176V~264V)	
Frequency	50Hz / 60Hz (Range: 45Hz - 62.5Hz)	
Wiring Structure	3P4W(400V);3P4W&3P3W(220V)	
Harmonic Filtering	2nd ~ 50th	
Reactive Power Compensation	Adjustable from -1 to +1	
Unbalance Correction	100% imbalance correction	
Protection Function	Over-voltage protection, under-voltage protection, short-circuit protection, inverter bridge inverse protection, over-compensation protection and so on	
Current Transformer	X/20mA	
Harmonic Filter Rate	≥ 97%	
Filter Performance	THDi<5%	
Noise Level	<50dB	
Response Time	50us	
Full Response Time	<10ms	
IGBT Switching Frequency	20kHz	
Topology Design	2 level topology	
Parallel Quantities	Unlimited	
Communication Port	RS485 Communication	
Communication Protocol	Modbus Protocol	
Module Display Interface	4.3" Display/7" extra Display	
Mounting Type	Wall mounted	
Monitoring	Independent monitoring and centralized monitoring	
Standard Compliance	EN IEC 61000; EN IEC 62477; UL 508:2024	
Protection Class	IP 20 -Standard type	
Operating Temperature	-10 ~ 45℃	
Relative Humidity	5% to 95% non-condensing	
Altitude	up 2000 m. Between 2000 m to 4000 m, according to GB/T3859.2,the power decreases by 1% for every additional 100 m.	
Color	Black or Customized Color	
Note	For module（In Series）, the maximum allowable load current is 50 amps.	



CoEpower Low Noise Series
Fanless SVG/AHF

Noise
<40dB

Xi'an CoEpower Electric Co., Ltd

Add: Building 4, Xi'an Te Zhong Fei Xing Qi Industrial Park, No. 2,
Biyuan 3rd Road, High-tech Zone, Xi'an City, 710117, China

Type Approved
Safety
Regular Production
Surveillance
www.tuv.com
ID 1111303336

Xi'an CoEpower Electric Co., Ltd

CoEpower Low Noise Series Fanless SVG/AHF

10-30A
10-20kvar



Reactive/Harmonics solutions for noise-sensitive users

40dB

Noise<40dB

Flexible Installation

Volume less than 0.03m^3, no distribution room required, can be wall-mounted at any location



Data Sheet of Fanless series

	AHF		SVG	
Rated Capacity at 0.4kV	15/20A	30A	10/15kvar	20kvar
Rated Capacity at 0.22kV	15/20A	30A	5/7kvar	10kvar
Module Size (Wall Mounted)	420W*545H*150D	500W*605H*160D	420W*545H*150D	500W*605H*160D
Net Weight	17KG	30KG	17KG	30KG
Rated Voltage	400V/220V			
Frequency	50/60HZ			
Wiring Structure	3P4W/3P3W			
Harmonic Filtering	2nd~51th		2nd~13th	
Reactive Power Compensation	Adjustable from -1 to +1			
Unbalance Correction	100% imbalance correction			
Protection Function	Over-voltage protection, under-voltage protection, short-circuit protection, inverter bridge inverse protection, over-compensation protection and so on			
Current Transformer	50/5~6000/5			
Harmonic Filter Rate	⩾ 97%			
Filter Performance	THDI<5%			
Noise Level	40DB			
Response Time	50us			
Full Response Time	<10ms			
IGBT Switching Frequency	20kHz			
Topology Design	3 level topology			
Parallel Quantities	Unlimited			
Communication Port	RS485 Communication & Optional Ethernet			
Communication Protocol	Modbus Protocol			
Module Display Interface	4.3" Display (wall mounted)			
Monitoring	Independent monitoring and centralized monitoring			
Standard Compliance	EN IEC 61000; EN IEC 62477			
Protection Class	IP20			
Operating Class	-10 ~ 45°C			
Relative Humidity	5% to 95% non-condensing			
Altitude	<2000m, no derating required; 2000-4000m, derate 1% for every additional 100m.			
Color	Black or Customized Color			

Typical application scenarios

Office building:



Offices building are usually equipped with a large number of LED/air conditioners, which are also troubled by harmonics. Meanwhile end user in office are sensitive to noise.

CoEpower fanless series AHF can effectively reduce the content of harmonics and barely make any noises.

At same time, CoEpower AHF can also handle the three-phase imbalance caused by single-phase equipment.

Hotel：



Hotels also generate a lot of 3rd harmonics and increased neutral current due to a large number of LED lighting.

CoEpower fanless series AHF can compensate the 3rd harmonic and significantly reduce the N line current

CoEpower Low Noise Series
Silent Fan SVG/AHF

Noise
<50dB

Xi'an CoEpower Electric Co., Ltd

Add: Building 4, Xi'an Te Zhong Fei Xing Qi Industrial Park, No. 2,
Biyuan 3rd Road, High-tech Zone, Xi'an City, 710117, China

Type Approved
Safety
Regular Production
Surveillance
www.tuv.com
ID 1111303336

Xi'an CoEpower Electric Co., Ltd

CoEpower Low Noise Series Silent Fan SVG/AHF

15-75A
10-50kvar



A solution that balances noise control and capacity requirements:

50dB

Noise<50dB

Flexible Installation

Volume less than 0.04m^3, no distribution room required, can be wall-mounted at any location

100%↑

With same size to 20k fan less type, Twice the power density

Wide Range

Up to 75A/50kvar maximum



Data Sheet of Silent Fan series

	AHF		SVG	
Rated Capacity at 0.4kV	15/20/30A	50/75A	10/15/20kvar	30/50kvar
Rated Capacity at 0.22kV	15/20/30A	50/75A	5/7/10kvar	15/25kvar
Module Size (Wall Mounted)	420W*541H*86D	440W*550H*160D	420W*541H*86D	440W*550H*160D
Net Weight	16KG	30KG	16KG	30KG
Rated Voltage	400V/220V			
Frequency	50/60HZ			
Wiring Structure	3P4W/3P3W			
Harmonic Filtering	2nd~51th		2nd~13th	
Reactive Power Compensation	Adjustable from -1 to +1			
Unbalance Correction	100% imbalance correction			
Protection Function	Over-voltage protection, under-voltage protection, short-circuit protection, inverter bridge inverse protection, over-compensation protection and so on			
Current Transformer	50/5~6000/5			
Harmonic Filter Rate	⩾ 97%			
Filter Performance	THDI<5%			
Noise Level	50DB			
Response Time	50us			
Full Response Time	<10ms			
IGBT Switching Frequency	20kHz			
Topology Design	3 level topology			
Parallel Quantities	Unlimited			
Communication Port	RS485 Communication & Optional Ethernet			
Communication Protocol	Modbus Protocol			
Module Display Interface	4.3" Display (wall mounted)			
Monitoring	Independent monitoring and centralized monitoring			
Standard Compliance	EN IEC 61000; EN IEC 62477			
Protection Class	IP20			
Operating Class	-10 ~ 45°C			
Relative Humidity	5% to 95% non-condensing			
Altitude	<2000m, no derating required; 2000-4000m, derate 1% for every additional 100m.			
Color	Black or Customized Color			

Appendix：400V 3P3W module

	AHF	SVG
Rated Capacity	15/20/30A	10/15/20kvar
Module Size (Wall Mounted)	420W*420H*130D	
Net Weight	17KG	
Other parameters are the same as above		

Typical application scenarios

Small factories



Small factories need to compensate for harmonics and reactive power in their production equipment, while also facing limited installation space. Therefore, CoEpower's silent fan series is the perfect solution for such sites. It balances capacity and installation space requirements while keeping noise levels below 50dB.

Shopping Center



Shopping center usually have a huge number of LEDs, air conditioning inverters, refrigeration equipment, etc., which will generate 3rd/5th/7th harmonics in the system.

CoEpower AHF can significantly reduce the harmonic in the system; At the same time, CoEpower SVG can replace traditional capacitors, improve the power factor on site, and compensate for three-phase imbalance.

IP55
AHF/ SVG

Outdoor Solution



+86-17755260880
www.coepowers.com
sales@coepower.com
Building 4, Xi'an Te Zhong Fei Xing Qi Industrial Park, No. 2, Biyuan 3rd Road,
High-tech Zone, Xi'an City, 710117, China

COEPOWER

CORE ADVANTAGES OF THE PRODUCT

01 Excellent compensation performance

- Adopting 20kHz high-speed IGBT switching technology, the response time is less than 5ms
- Dynamic real-time compensation, not affected by grid voltage imbalance
- Three-level topology improves system voltage resistance and reduces device stress

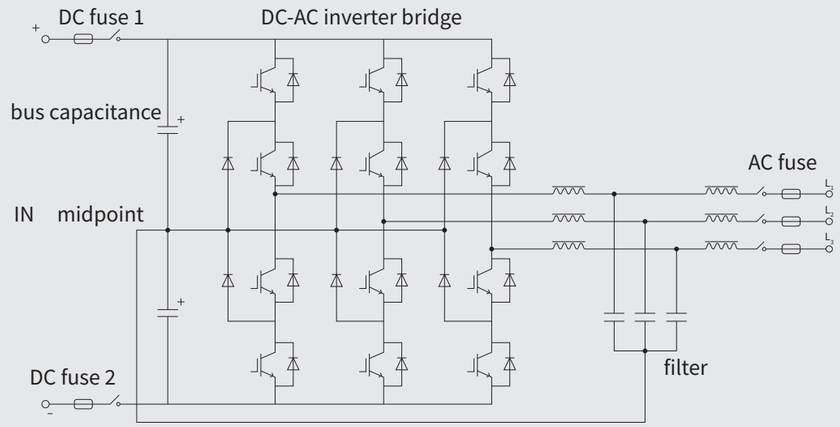

02 Higher protection level

- Military-grade sealing design: Innovative physical isolation of air ducts and core components, completely blocking dust and salt spray erosion
- IP65 waterproof fortress: features a special waterproof fan and multiple sealing structures, withstanding heavy rain and heavy snow.
- Intelligent operation and maintenance system: built-in magnetic trip circuit breaker, cutting off faults within seconds, maintenance efficiency increased by 50%



03 Easy to install and commission

- Support floor installation, pole installation and wall-mount installation;
- The device has a built-in circuit breaker, and only the power line and CT need to be connected.
- Built-in WIFI controller, supports remote commissioning and monitoring

Application Scenarios



IP55 OutDoor Static VAR Generator				
Rated Capacity at 0.48kV	40kvar		80 kvar	100 kvar
Rated Capacity at 0.4kV	30 kvar	50 kvar	75 kvar	100 kvar
Rated Capacity at 0.22kV	15 kvar	25 kvar	35 kvar	55 kvar
IP55 OutDoor Active Harmonic Filter				
Rated Capacity at 0.48kV	50 A		100 A	120 A
Rated Capacity at 0.4kV	50 A	75 A	100 A	150 A
Rated Capacity at 0.22kV	50 A	75 A	100 A	150 A
Module Size (mm)	550*250*780	550*250*780	630*300*880	630*300*880
Net Weight	60kgs	60kgs	78 kgs	78 kgs
Air Flow for Heat Dissipation	4x120CFM	4x120CFM	5x210CFM	5x210CFM
Rated Voltage	480V(380V~528V)/ 400V(304V~456V)/ 220V(176V~264V)			
Frequency	50Hz/ 60Hz (Range: 45Hz - 62.5Hz)			
Wiring Structure	3P3W/ 3P4W			
Harmonic Filtering	2nd ~ 13th (SVG) ; 2nd ~ 50th (AHF) ;			
Reactive Power Compensation	Adjustable from -1 to +1			
Unbalance Correction	100% imbalance correction			
Protection Function	Over-voltage protection, under-voltage protection, short-circuit protection, inverter bridge inverse protection, over-compensation protection and so on			
Current Transformer	50/5 ～ 8000/5			

Harmonic filter Rate	⩾ 97%
Filter Performance	THDi<5%
Noise Level	<65dB (standard type)
Response Time	50us
Full Response Time	<10ms
IGBT Switching Frequency	20kHz
Topology Design	3 level topology
Parallel Quantities	Unlimited
Communication Port	RS485 Communication
Communication Protocol	ModbusRTU Protocol
Module Display interface	7" WIFI Display
Mounting Type	Cabinet
Monitoring	Independent monitoring and centralized monitoring
Standard Compliance	IEC 61000; IEC 62477
Protection Class	IP55
Operating Temperature	-10 ~ 50°C
Relative Humidity	0% to 95% non-condensing
Altitude	2000 m. Between 2000 m to 4000 m,the power decreases by 1% for every additional 100 m.
Color	RAL7035
Built-in circuit breaker	Available